Components for Distribution Boxes
BL8060 Series Explosion-proof Circuit Breaker Modules

- Explosion protection to
  - -CENELEC
  - -IEC
  - -NEC
- Can be used in
  - Zone 1 and Zone 2
  - Class I, Zone 1 and Zone 2
  - Class I, Division 2, Groups A , B, C, D
- Product of flame-proof structure; the cavity is of engineering plastic embedded with high strength metal frame structure; with strong corrosion-proof capacity and reliable performance.
- Built-in Schneider iC65 series MCB, special operation mechanism internally designed, reliable overall operation.

Catalogue number logic

BL 8060 - □ - □ / □ / □ / □ / □

- L: with earth leakage (optional)
- F: with auxiliary (1NO+1NC, optional)
- C: lighting protection
- D: dynamic protection
- Breaking capacity
  - N: 6kA
  - H: 10kA
  - G: 15kA
- Number of pole
- Rated current
- d: noly for “Ex d” type
- Design No.
- Explosion-proof circuit breaker modules

Zones 1&2

Components for Distribution Boxes
BL8060 Series Explosion-proof Circuit Breaker Modules

Technical data

Explosion-proof circuit breaker modules BL8060 - □ / □/ □/ □/ □ (≤ 63A)

Explosion protection	Ⓔx II 2 G Ex d e IIC Gb
Certificates	EUT 14 ATEX 1301U; IECEx CQM 14.0031U
Conformity to standards	EN 60079-0, EN 60079-1, EN 60079-7 IEC 60079-0, IEC 60079-1, IEC 60079-7
Enclosure material	GRP (glass fibre-reinforced polyester resin, embedded with metal frame)
Rated voltage	Max.690V AC
Rated current	1A, 2A, 4A, 6A, 10A, 16A, 20A, 25A, 32A, 40A, 50A, 63A
Rated residual operating current	30mA, 300mA, 300mA[S] [S]:Under–voltage tripping(instant)
Rated residual current characteristics	AC, A
Mechanical life	20000 times
Auxiliary contact	1NO+1NC (indicating contact in OF state)
Number of pole	1P, 2P, 3P, 4P, 1PL, 2PL
Ambient temperature	-20℃~+70℃

Breaking capacity

Ph.-Ph. (2P, 3P, 4P)		12~133V	220~240V	380~415V	440V	Use breaking capacity
Ph.-N (1P, 1P+N)		12~60V	100~133V	220~240V	-	
Rated current	1~4A	50kA	50kA	50kA	25kA	100%Icu
	6~63A	36kA	20kA	10kA	6kA	75%Icu

Dimension drawings (all dimensions in mm) - subject to alteration

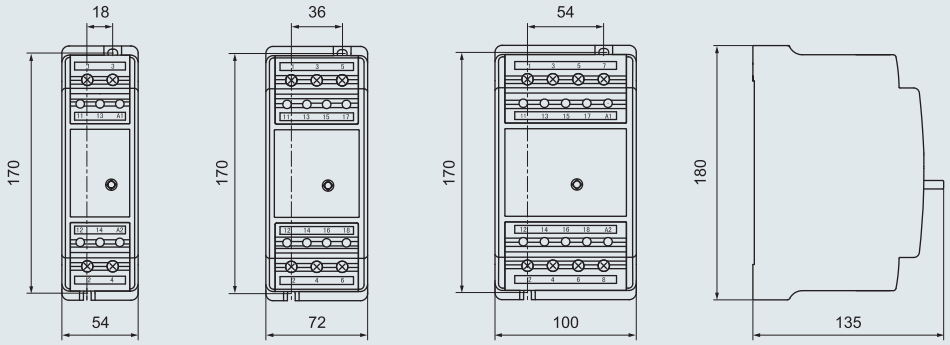

BL8060-□/1/□/□/□
BL8060-□/1/□/□/F
BL8060-□/2/□/□/□

BL8060-□/2/□/□/F
BL8060-□/3/□/□/□

BL8060-□/3/□/□/F
BL8060-□/4/□/□/□
BL8060-□/4/□/□/F

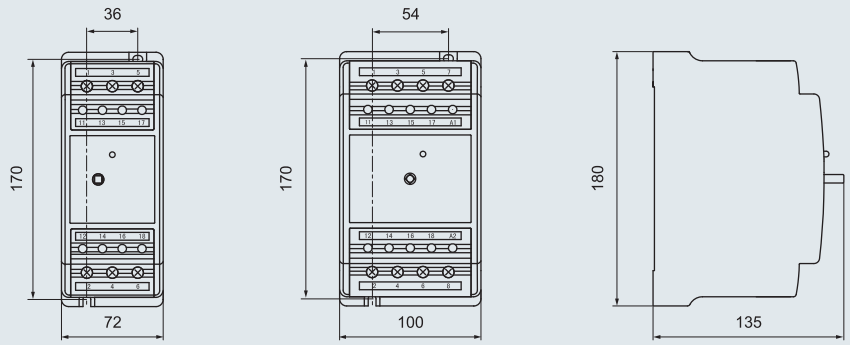

BL8060-□/1/□/□/L

BL8060-□/2/□/□/L

Components for Distribution Boxes
BL8060 Series Explosion-proof Circuit Breaker Modules

Selection table

Version	Rated voltage (V)	Rated current (A)	Rated residual operating current (mA)	Auxiliary contact	Schematic diagram
BL8060-□/1/□/□/□	230/440/690	1, 2, 4, 6, 10 16, 20, 25, 32 40, 50, 63	/	/	
BL8060-□/1/□/□/F	230/440/690		/	Indicating contact in OF state	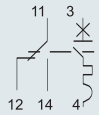
BL8060-□/1/□/□/L	230/440/690	40, 63	30	/	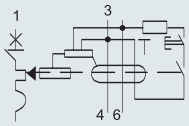
BL8060-□/2/□/□/□	230/440/690	1, 2, 4, 6, 10 16, 20, 25, 32 40, 50, 63	/	/	
BL8060-□/2/□/□/F	230/440/690		/	Indicating contact in OF state	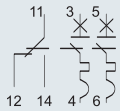
BL8060-□/2/□/□/L	230/440/690	40	30		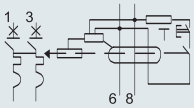
			300		
			300 S		
		63	30		
			300		
			300 S		
BL8060-□/3/□/□/□	230/440/690	1, 2, 4, 6, 10 16, 20, 25, 32 40, 50, 63	/	/	
BL8060-□/3/□/□/F	230/440/690		/	Indicating contact in OF state	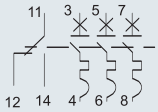
BL8060-□/4/□/□/□	230/440/690		/	/	
BL8060-□/4/□/□/F	230/440/690		/	Indicating contact in OF state	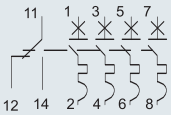

Components for Distribution Boxes
BL8060 Series Explosion-proof Circuit Breaker Modules

Technical data

Explosion-proof circuit breaker modules BL8060-d - □ / □/ □/ □/ □

Explosion protection	Ⓔx II 2 G Ex db IIC Gb
Certificates	EPT 15 ATEX 2252U; IECEx CQM 15.0016U
Conformity to standards	EN 60079-0, EN 60079-1, EN 60079-7 IEC 60079-0, IEC 60079-1, IEC 60079-7
Enclosure material	Copper-free aluminium, powder coated surface
Rated voltage	Max.690V AC
Rated current	Max.160A
Rated residual operating current	30mA, 300mA, 300mA[S] [S]:Under–voltage tripping(instant)
Rated residual current characteristics	AC, A
Mechanical life	20000 times
Auxiliary contact	1NO+1NC(Indicating contact in OF state)
Number of pole	1P, 2P, 3P, 4P 1PL, 2PL, 3PL, 4PL (≤ 63A)
Ambient temperature	-20℃~+70℃

Breaking capacity

Ph.-Ph. (3P, 4P)		220~230V	380~415V	440V	500V	690V	Use breaking capacity
Rated current	63A	20kA	10kA	6kA	-	-	75%Icu
	80~160A	120kA	85kA	75kA	50kA	10kA	100%Icu

Dimension drawings (all dimensions in mm) - subject to alteration

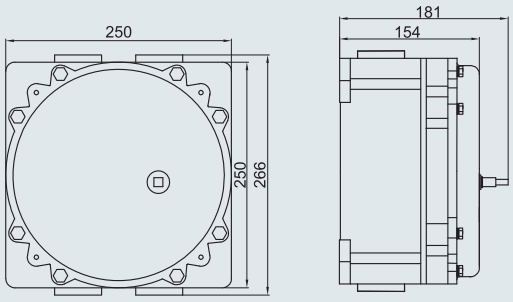

BL8060-d-□/1/□/□/L; BL8060-d-□/2/□/□/L
BL8060-d-□/3/□/□/L; BL8060-d-□/4/□/□/L
(≤ 63A)

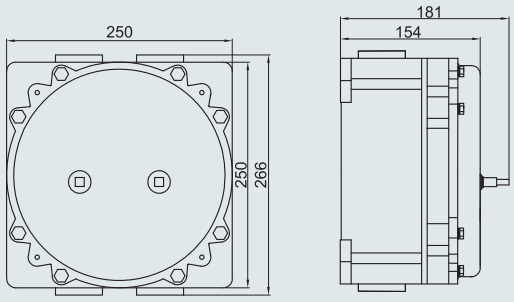

BL8060-d-□/1/□/□/L; BL8060-d-□/2/□/□/L
BL8060-d-□/1/□/□; BL8060-d-□/2/□/□
BL8060-d-□/3/□/□; BL8060-d-□/4/□/□
(≤ 63A)

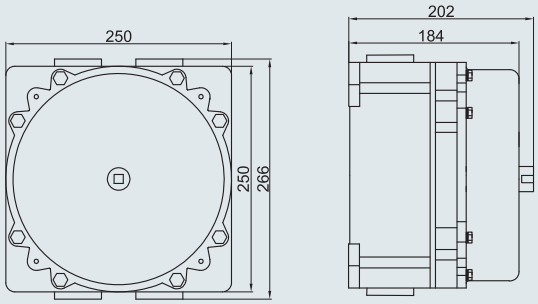

BL8060-d-□/3/□/□; BL8060-d-□/4/□/□
(80A~160A)

Components for Distribution Boxes
BL8060 Series Explosion-proof Circuit Breaker Modules

Selection table

Version	Rated voltage (V)	Rated current (A)	Rated residual operating current (mA)	Auxiliary contact	Schematic diagram
BL8060-□/3/□/□/□	230/440/690	63, 80, 100, 125, 160	/	/	
BL8060-□/3/□/□/F	230/440/690		/	Indicating contact in OF state	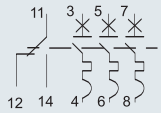
BL8060-□/3/□/□/L	230/440/690	63	30		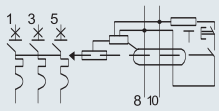
			300	/	
			300 S		
BL8060-□/4/□/□/□	230/440/690	63, 80, 100, 125, 160	/	/	
BL8060-□/4/□/□/F	230/440/690		/	Indicating contact in OF state	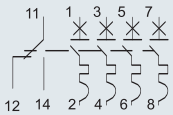
BL8060-□/4/□/□/L	230/440/690	63	30		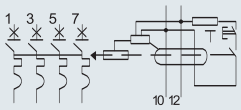
			300		
			300 S		